THIS DRAWING IS UNPUBLISHED. RELEASED FOR PUBLICATION - ,- .
© COPYRIGHT - BY TYCO ELECTRONICS CORPORATION. ALL RIGHTS RESERVED.

LOC	DIST
CM	00

REVISIONS

P	LTR	DESCRIPTION	DATE	DWN	APVD
	F	ECO-07-018567	12SEP07	KW	DB

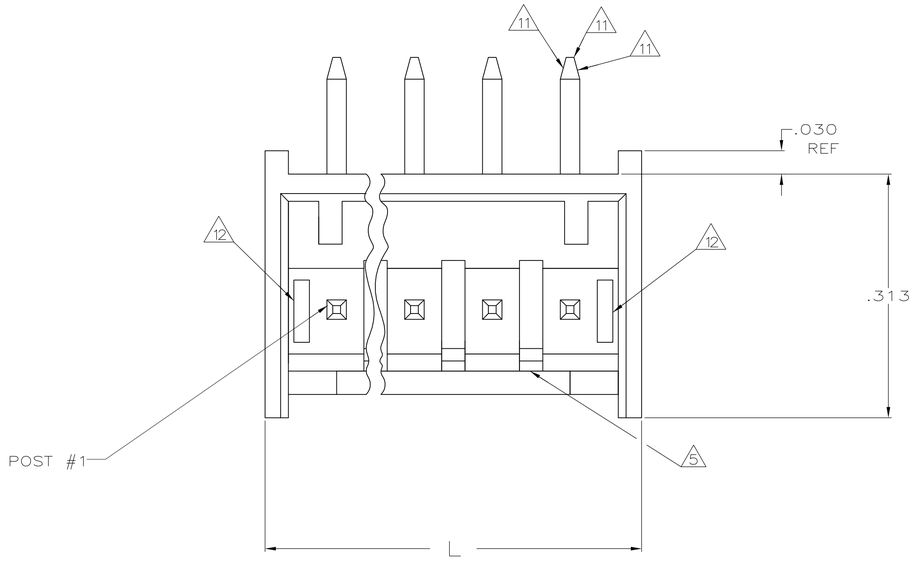

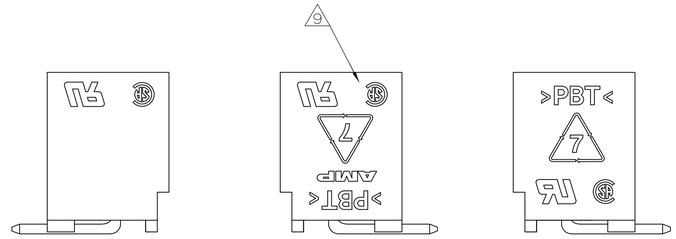

ALTERNATE CONFIGURATION | PREFERRED CONFIGURATION | ALTERNATE CONFIGURATION

POSSIBLE MARKING CONFIGURATIONS
SCALE 5:1

1. MATERIAL: HEADER– POLYESTER UL94V–O (BLACK)
   POST– COPPER ALLOY.
2. SOLDER SIDE OF P.C. BOARD SHOWN.
3. PARTS COMPLY WITH AMP SOLDERABILITY SPEC 109–11–2.
4. ONE HOLE MAY BE UNDERSIZED (.032–.035 DIA) FOR ASSEMBLY RETENTION DURING WAVE SOLDERING.
5. LATCH DETENT FEATURE OCCURS 2 PLACES ON EACH END (MAXIMUM OF FOUR PER PART). FOR 2 THRU 5 CIRCUIT HEADERS, LATCH FEATURE OCCURS BETWEEN EACH CIRCUIT.
6. COORDINATE DIMENSION APPLIES FROM CENTER OF ACTUAL FEATURE.
7. POST: 100% MATTE TIN PLATED.
8. POST MUST WITHSTAND 3.0 LBS (13.3 N) MIN FORCE WITHOUT DISLODGING, EITHER DIRECTION.
9. UL AND CSA LOGO WILL APPEAR IN THIS AREA. AMP LOGO MAY APPEAR IN THIS AREA OR ON BOTTOM OF PART.
10. TWO SIDES OF TAPER, AS SHOWN, MUST BE PLATED. TYPICAL, BOTH ENDS.
11. TWO SIDES OF TAPER, AS SHOWN, AND TIP MAY BE UNPLATED. TYPICAL, BOTH ENDS.
12. SLOTS MAY OR MAY NOT APPEAR ON THESE PARTS.
13. POST: MATTE TIN–LEAD (93/7) PLATED.

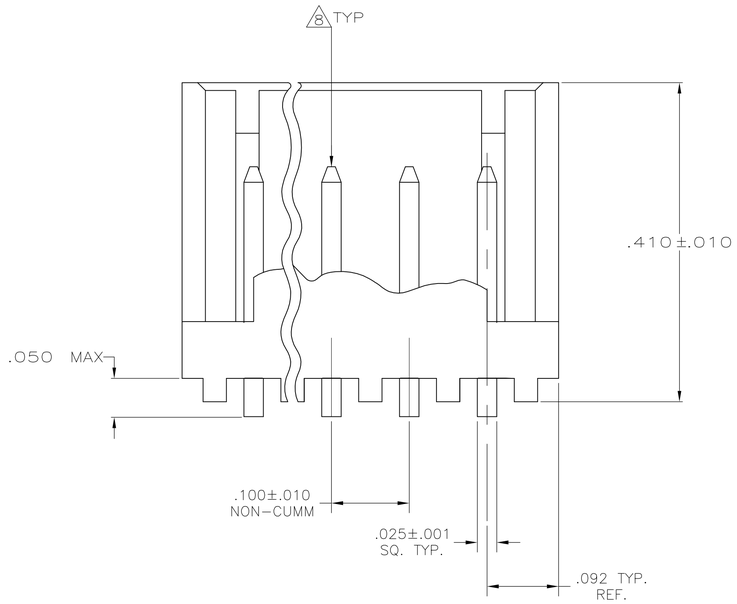

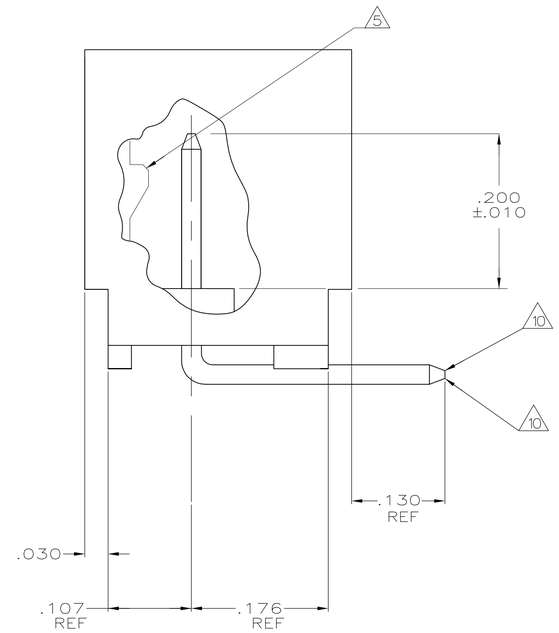

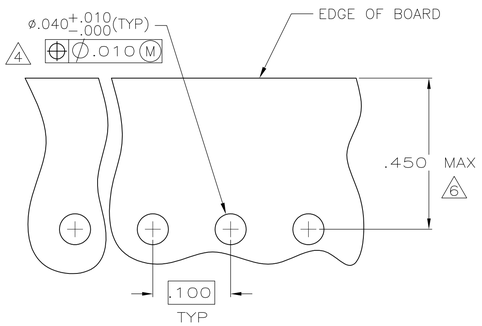

RECOMMENDED MOUNTING HOLE PATTERN
FOR .063 THK PRINTED CIRCUIT BOARD 2

.035	0.89	.176	4.47	–	–
.032	0.81	.130	3.3	–	–
.030	0.76	.107	2.72	–	–
.025	0.64	.100	2.54	.450	11.43
.010	0.25	.092	2.34	.410	10.41
.005	0.13	.063	1.6	.313	7.95
.001	0.03	.050	1.27	.300	7.62
.000	0	.040	1.02	.200	5.08
IN	MM	IN	MM	IN	MM

CONVERSION TABLE

LEADFREE	FINISH	IN	MM	NO OF POSITIONS	PART NUMBER
YES	7	1.484	37.69	14	3–644803–4
		1.384	35.15	13	3–644803–3
		1.284	32.61	12	3–644803–2
		1.184	30.07	11	3–644803–1
		1.084	27.53	10	3–644803–0
		.984	24.99	9	2–644803–9
		.884	22.45	8	2–644803–8
		.784	19.91	7	2–644803–7
		.684	17.37	6	2–644803–6
		.584	14.83	5	2–644803–5
		.484	12.29	4	2–644803–4
		.384	9.75	3	2–644803–3
		.284	7.21	2	2–644803–2
NO	13	1.484	37.69	14	1–644803–4
		1.384	35.15	13	1–644803–3
		1.284	32.61	12	1–644803–2
		1.184	30.07	11	1–644803–1
		1.084	27.53	10	1–644803–0
		.984	24.99	9	644803–9
		.884	22.45	8	644803–8
		.784	19.91	7	644803–7
		.684	17.37	6	644803–6
		.584	14.83	5	644803–5
		.484	12.29	4	644803–4
		.384	9.75	3	644803–3
		.284	7.21	2	644803–2
		L		HEADER ASSEMBLY	

METRIC

THIS DRAWING IS A CONTROLLED DOCUMENT.

DIMENSIONS: INCHES

TOLERANCES UNLESS OTHERWISE SPECIFIED:
0 PLC ± –
1 PLC ± –
2 PLC ± –
3 PLC ± .005
4 PLC ± –
ANGLES ± –

MATERIAL 1
FINISH SEE TABLE

DWN S. CARPENTER 28MAY2003
CHK D. BOSSI 28MAY2003
APVD D. BOSSI 28MAY2003
PRODUCT SPEC
APPLICATION SPEC
WEIGHT

Tyco Electronics
Tyco Electronics Corporation
Harrisburg, PA 17105–3608

NAME MTA–100 SHROUDED HEADER ASSEMBLY, FRICTION LOCK,RIGHT ANGLE POST, TIN OR TIN LEAD PLATED

SIZE	CAGE CODE	DRAWING NO	RESTRICTED TO
A1	00779	C–644803	–

CUSTOMER DRAWING | SCALE 10:1 | SHEET 1 OF 1 | REV F